F012 183 541

Stand / Issue } 98-08-27 **Fig./Abb. 1**

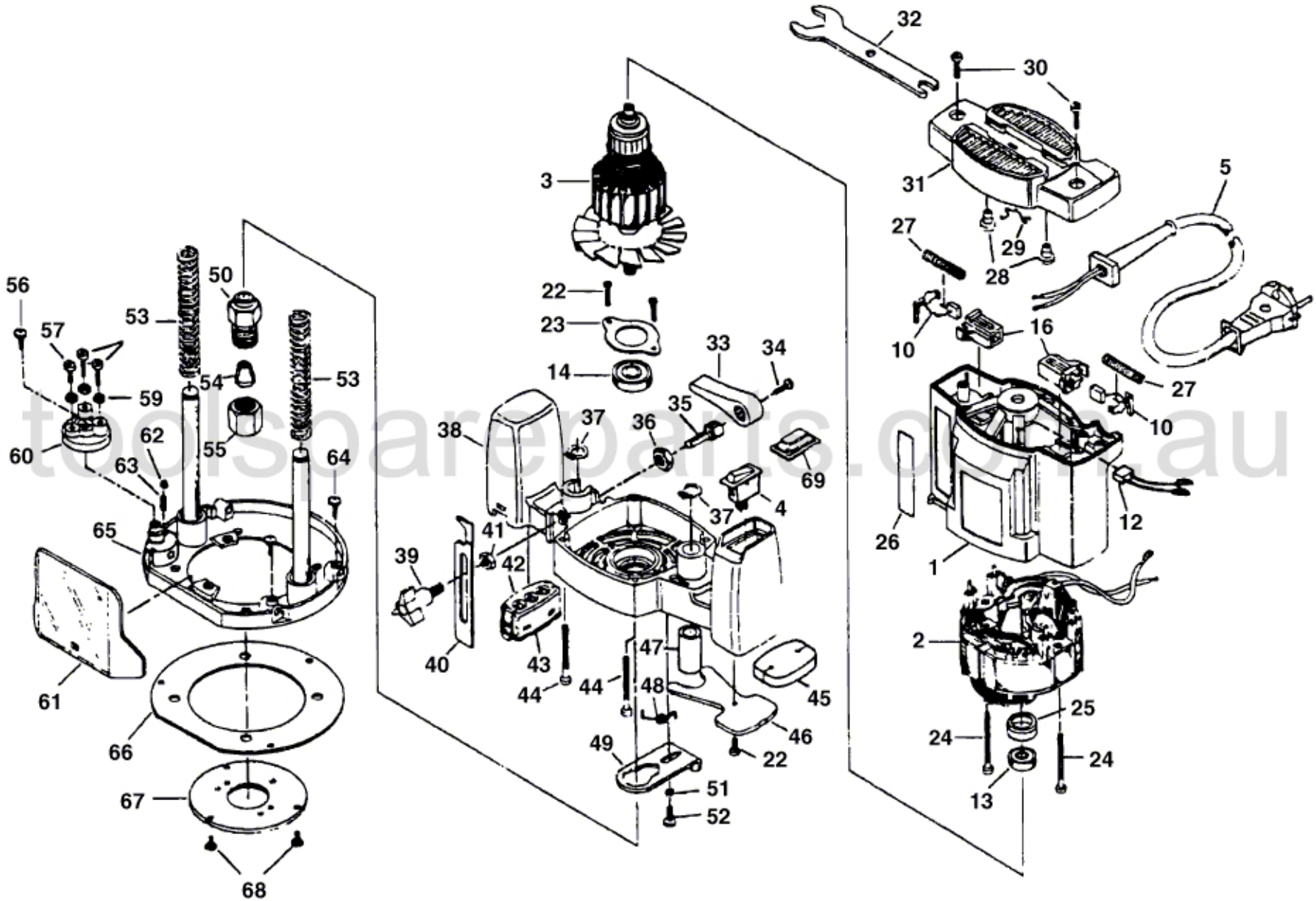

toolspareparts.com.au